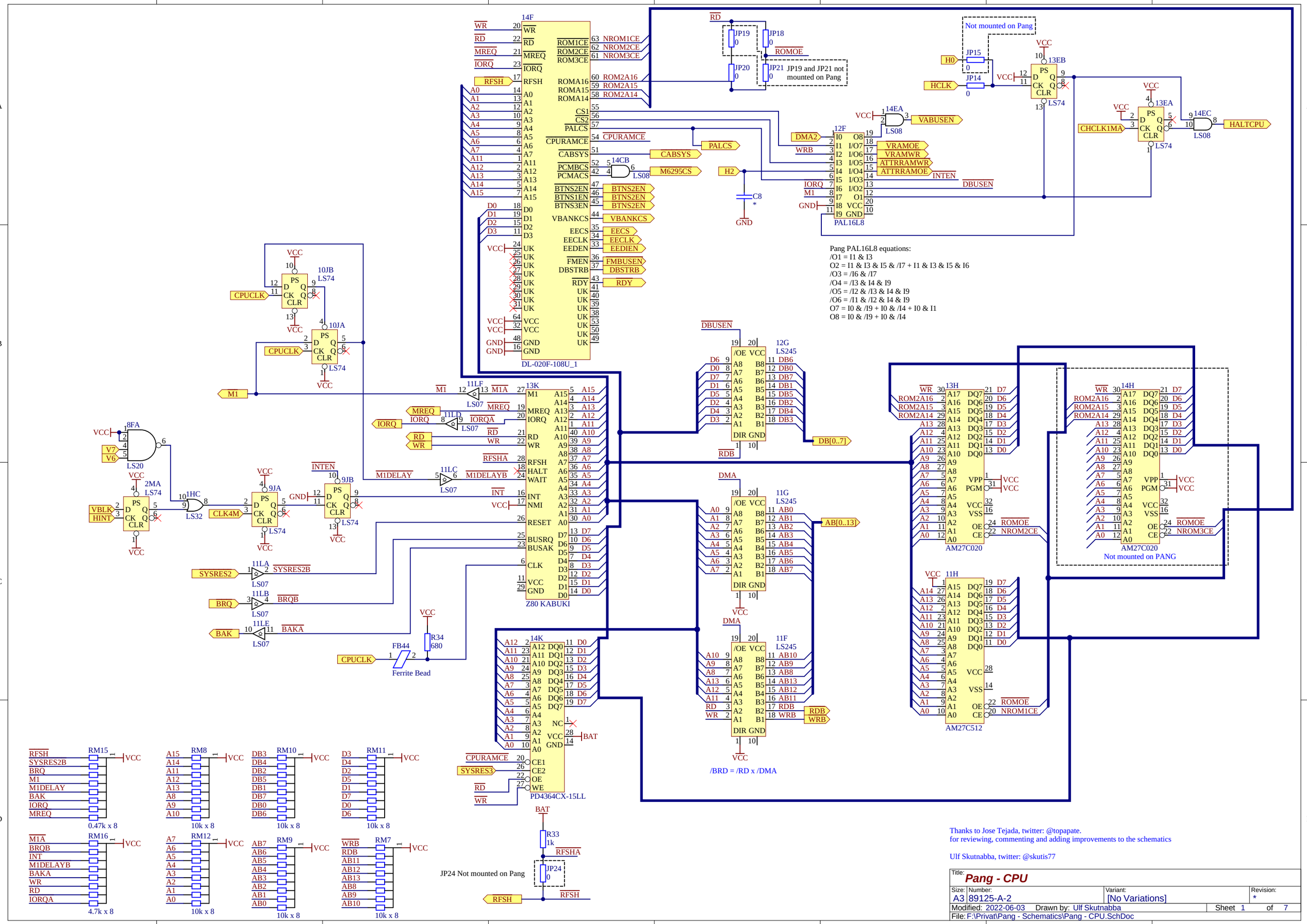


Thanks to Jose Tejada, twitter: @topapate.
for reviewing, commenting and adding improvements to the schematics

Ulf Skutnabba, twitter: @skutis77

| | | | |
|---|---|---|---|
| Title: **Pang - CPU** | | | |
| Size: A3 | Number: 89125-A-2 | Variant: [No Variations] | Revision: * |
| Modified: 2022-06-03 | Drawn by: Ulf Skutnabba | Sheet 1 of 7 | |
| File: F:\Privat\Pang - Schematics\Pang - CPU.SchDoc | | | |

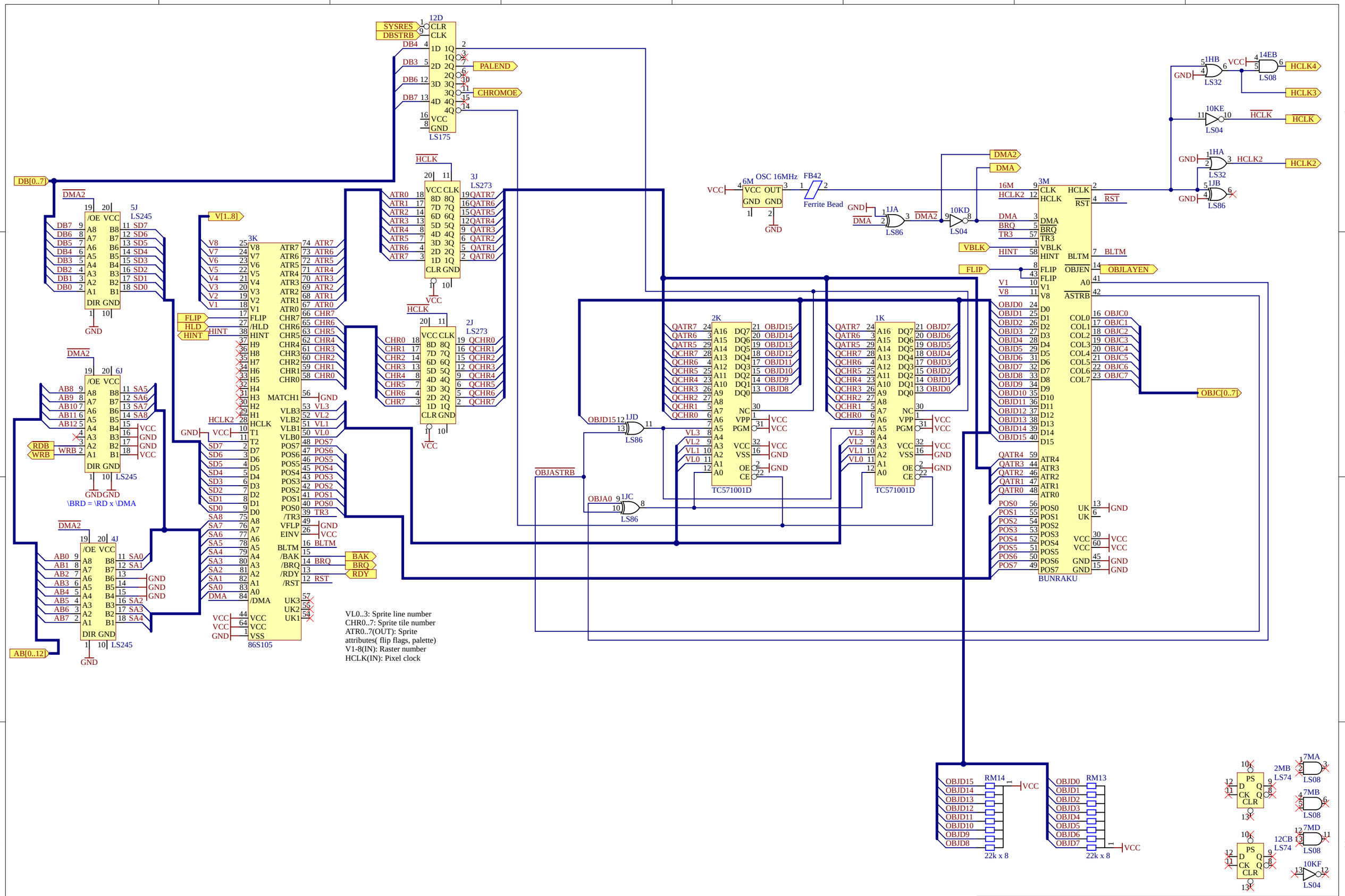


Title: **Pang - Objects**

| Size: | Number: | Variant: | Revision: |
|---|---|---|---|
| A3 | 89125-A-2 | [No Variations] | * |

Modified: 2022-06-03 Drawn by: Ulf Skutnabba Sheet 2 of 7

File: F:\Privat\Pang - Schematics\Pang - Objects.SchDoc

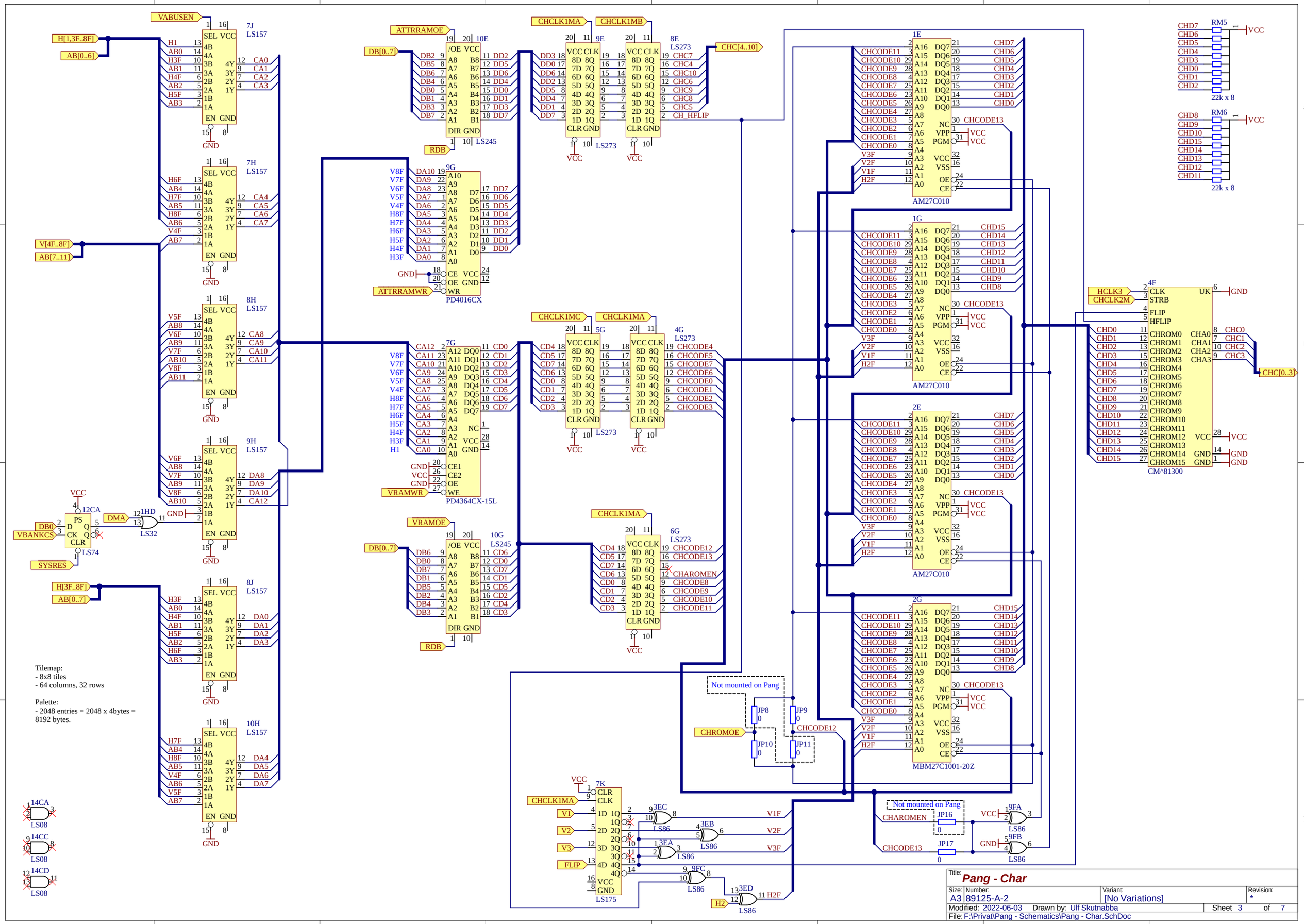


Title: **Pang - Char**

| Size | Number | Variant | Revision |
|---|---|---|---|
| A3 | 89125-A-2 | [No Variations] | * |

Modified: 2022-06-03 Drawn by: Ulf Skutnabba Sheet 3 of 7

File: F:\Privat\Pang - Schematics\Pang - Char.SchDoc

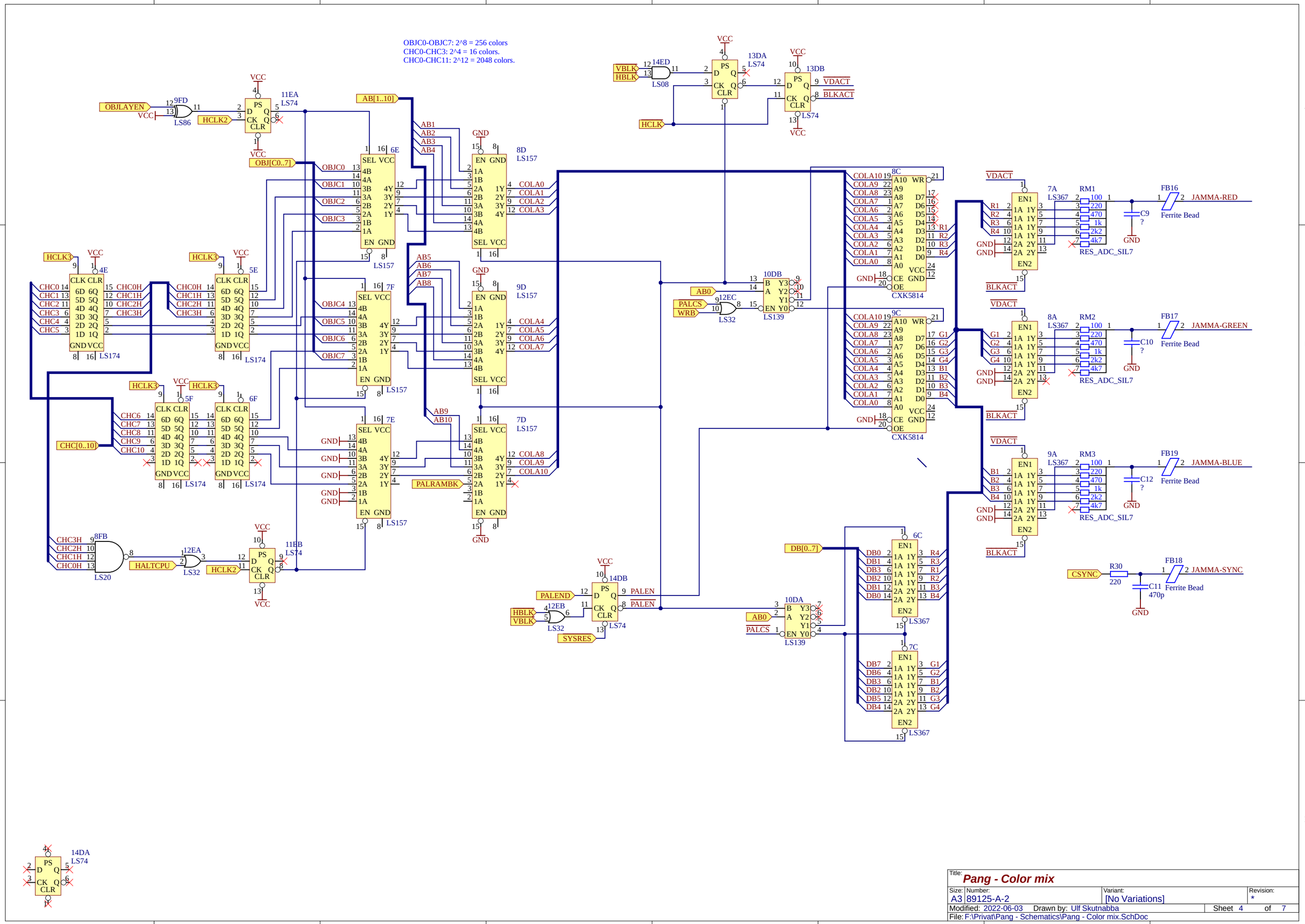


Title: **Pang - Color mix**

| Size: | Number: | Variant: | Revision: |
|---|---|---|---|
| A3 | 89125-A-2 | [No Variations] | * |

Modified: 2022-06-03 Drawn by: Ulf Skutnabba Sheet 4 of 7

File: F:\Privat\Pang - Schematics\Pang - Color mix.SchDoc

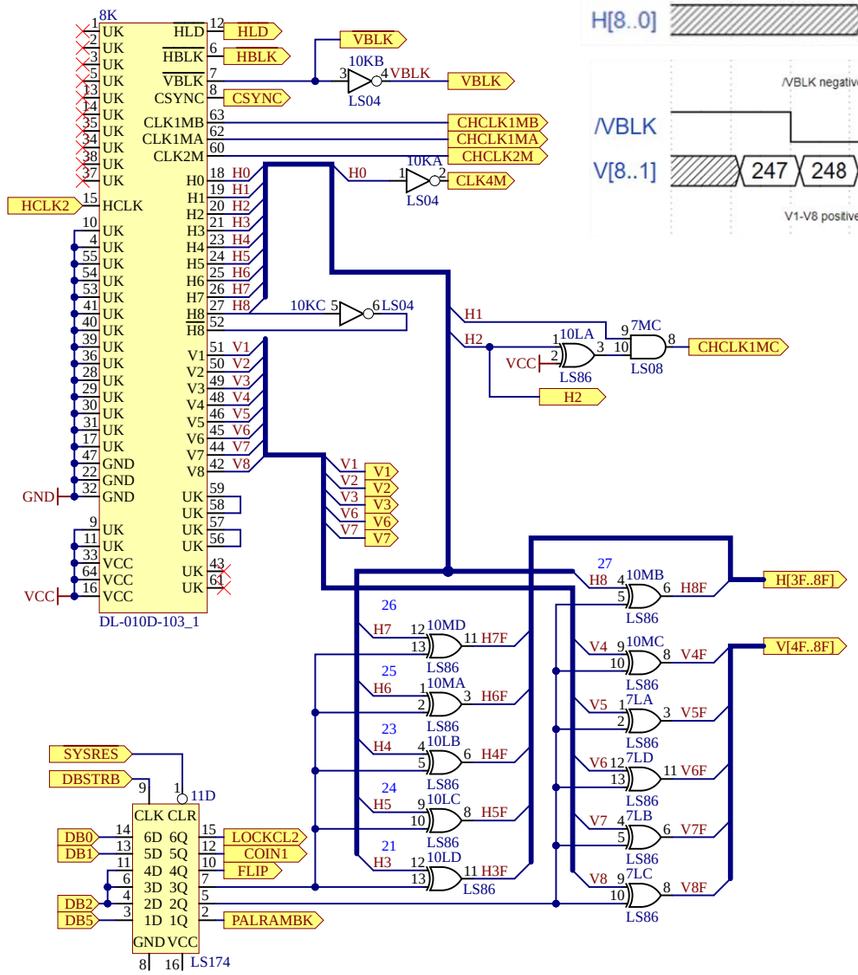


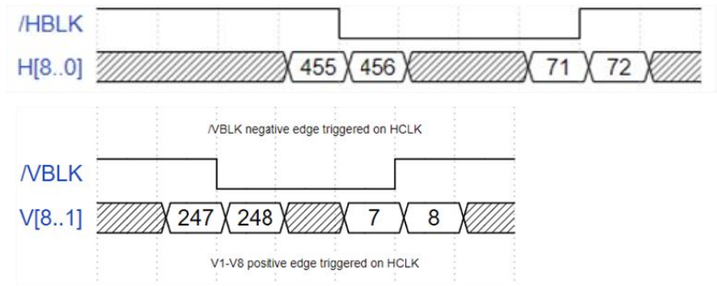


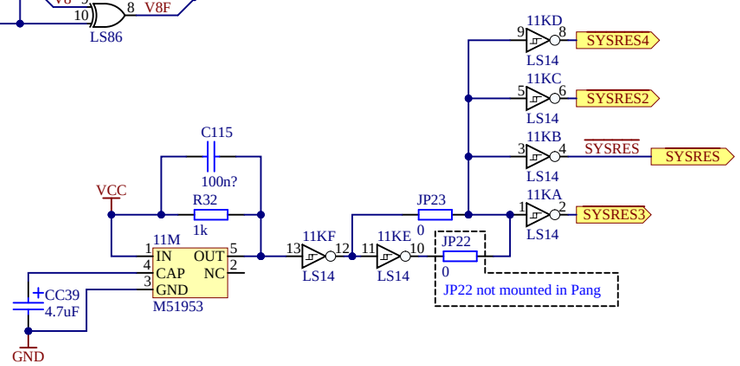


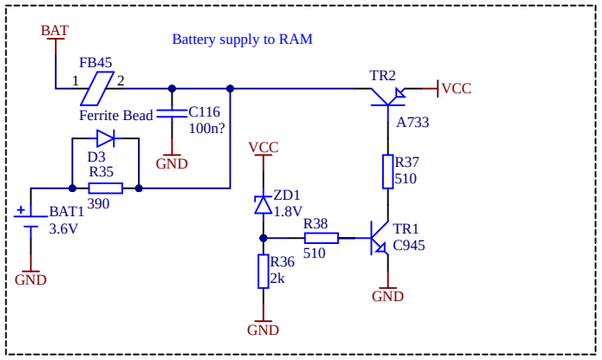


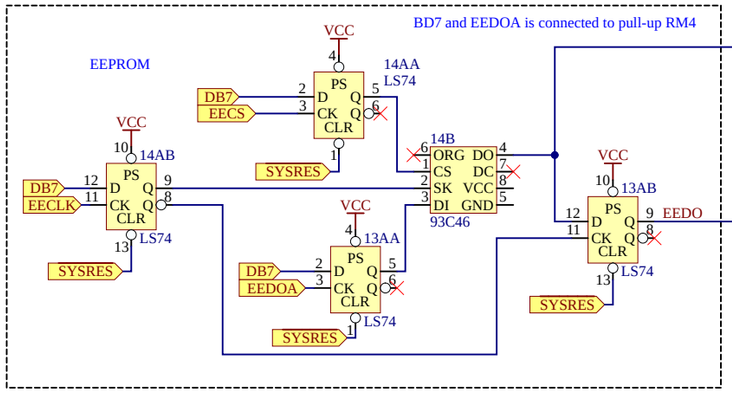


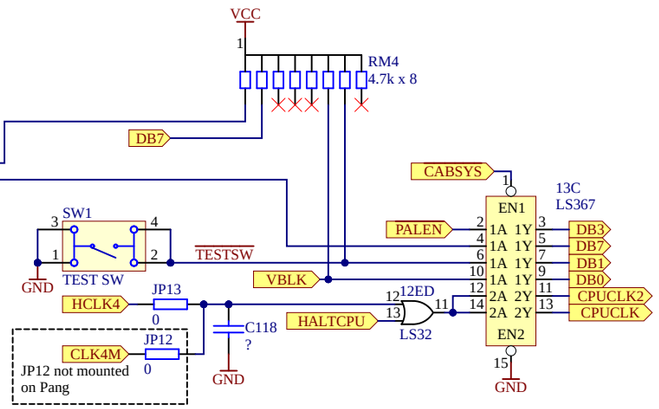


Title: **Pang - Misc**

| Size | Number | Variant | Revision |
|---|---|---|---|
| A3 | 89125-A-2 | [No Variations] | * |

Modified: 2022-06-03 Drawn by: Ulf Skutnabba Sheet 5 of 7

File: F:\Privat\Pang - Schematics\Pang - Misc.SchDoc

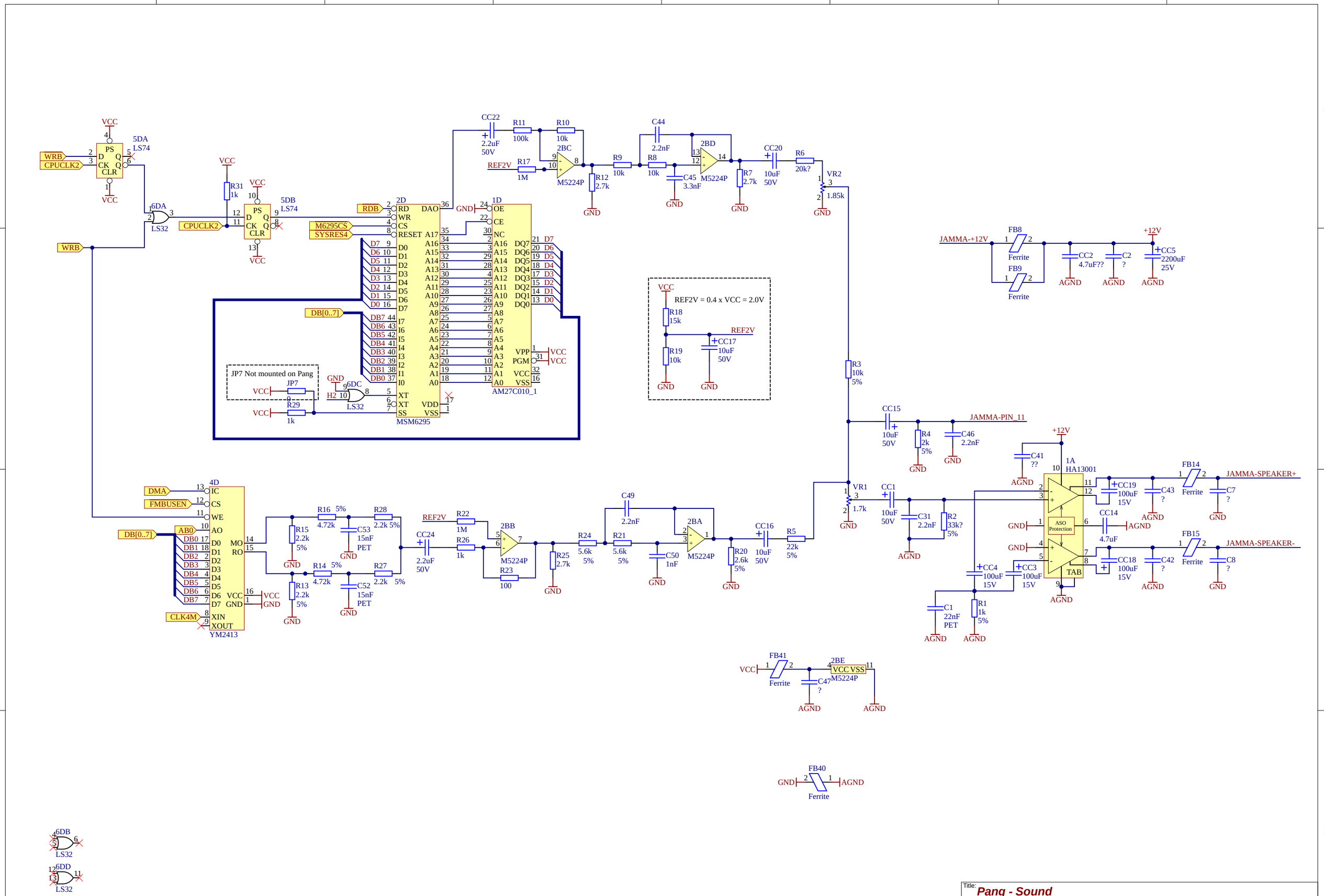


Title: **Pang - Sound**

| Size: | Number: | Variant: | Revision: |
|---|---|---|---|
| A3 | 89125-A-2 | [No Variations] | * |

Modified: 2022-06-03 Drawn by: Ulf Skutnabba Sheet 6 of 7

File: F:\Privat\Pang - Schematics\Pang - Sound.SchDoc

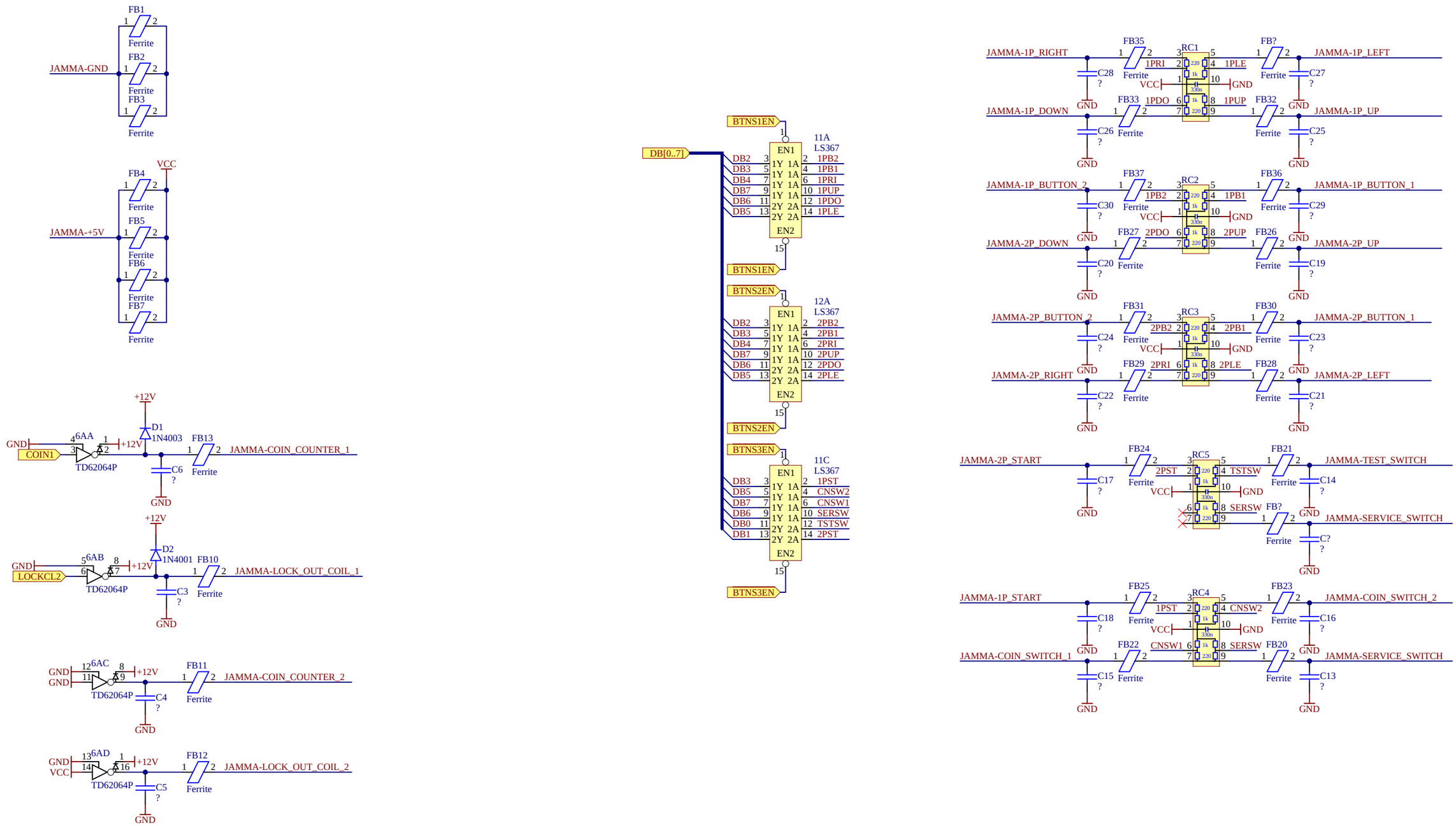


| | | | |
|---|---|---|---|
| Title: **Pang - Input and Output** | | | |
| Size: A3 | Number: 89125-A-2 | Variant: [No Variations] | Revision: * |
| Modified: 2022-06-03 | Drawn by: Ulf Skutnabba | Sheet 7 of 7 | |
| File: F:\Privat\Pang - Schematics\Pang - Input and Output.SchDoc | | | |